11222019

NORLAKE SCIENTIFIC®

CUTSHEET

Exterior
FF201WWW/0MHC

Front View

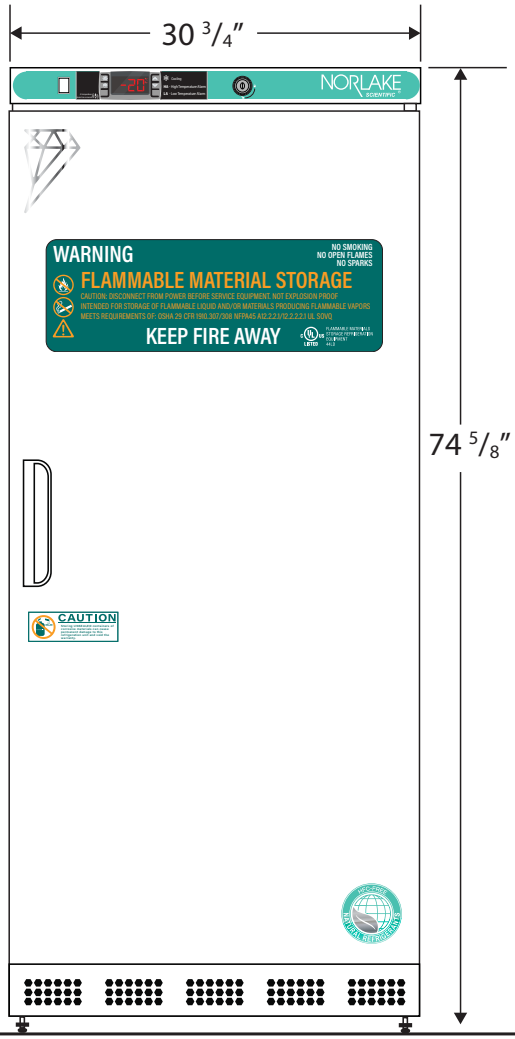

Side View

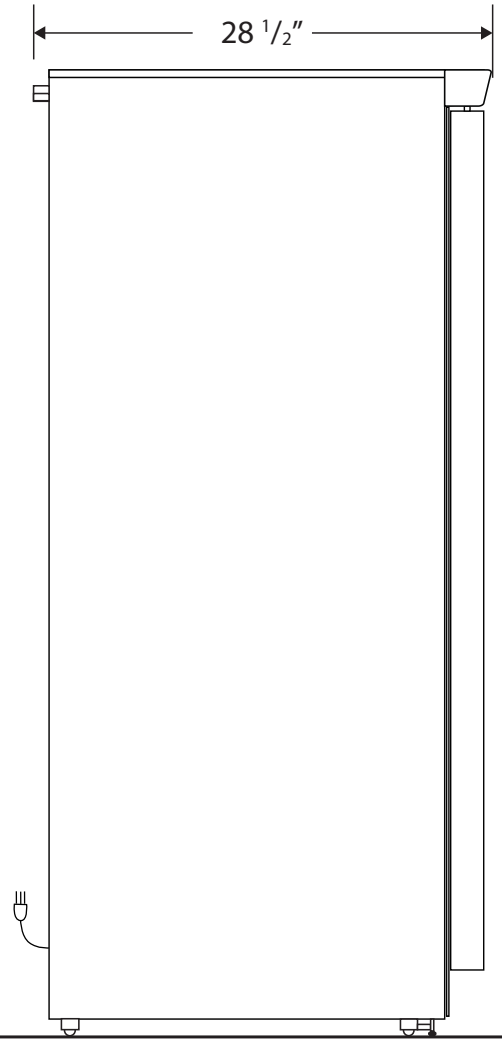

Top View

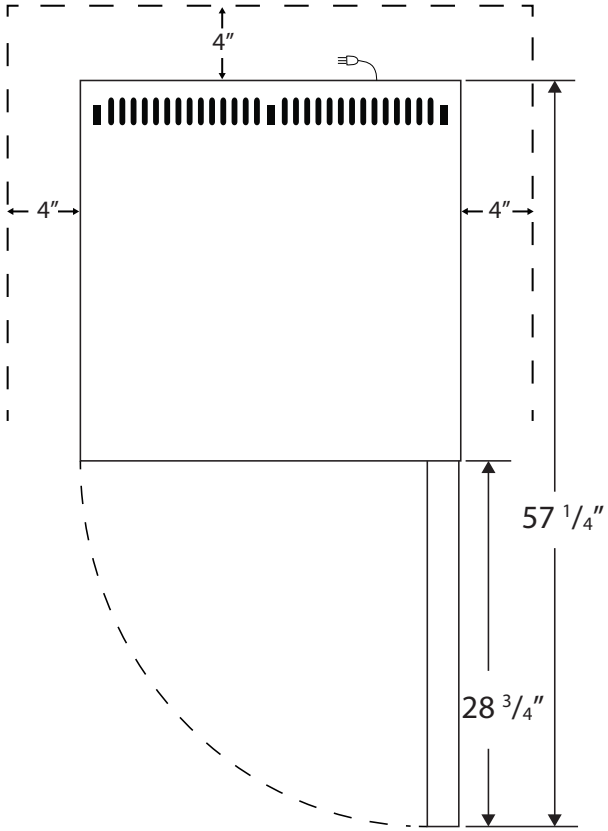

115VAC/60Hz/1PH
NEMA-5-15P

NOTE: Ventilation Requirements – Minimum 4" clearance on sides and back

Cu. Ft	Defrost	Door	Int Door	Shelves	W"	D"	H"	Refrigerant	H.P.	Amps	Weight
20	Manual	1 Solid	0	6 Fixed	30 ¾	28 ½	74 ⅝	R290	½	1.96	207 lbs.